EWELLIX
MAKERS IN MOTION

INSTALLATION, OPERATION AND MAINTENANCE MANUAL

CAHB-2xE series

Linear actuator CAHB-20E, CAHB-21E and CAHB-22E

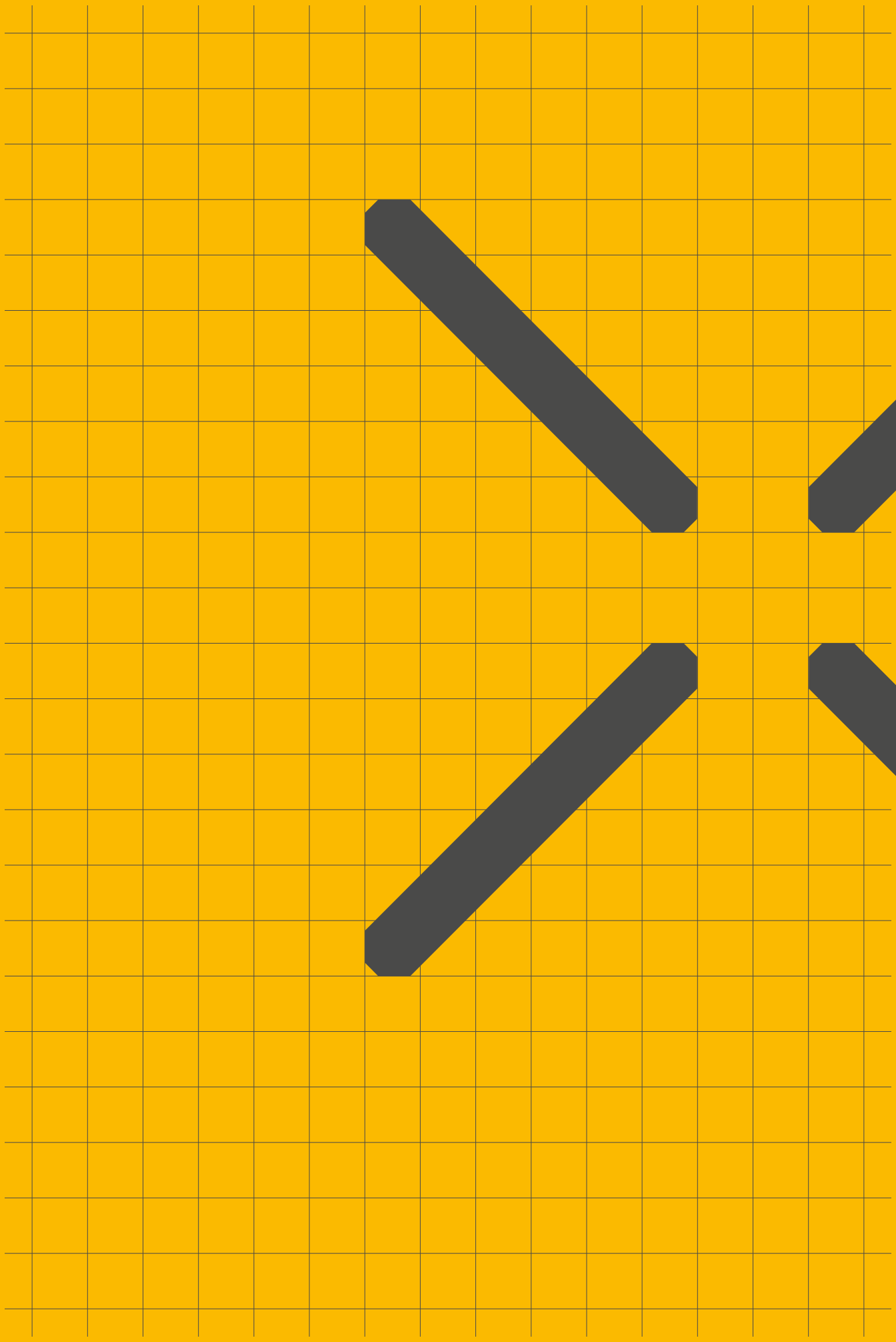

Contents

1.0 General information ... 4
1.1 Information on this manual ... 4
1.2 Explanation of symbols and signal words ... 4
1.3 Limitation of liability ... 5
1.4 Warranty terms ... 5
1.5 Customer service ... 5

2.0 Safety ... 6
2.1 Limitation of liability ... 6
2.1.1 Intended use ... 6
2.2 Responsibility of the owner and processor ... 6
2.2.1 Qualifications ... 7
2.2.2 Specific dangers ... 7
2.3 Safety equipment ... 7
2.4 Changes and modifications on the actuator ... 8

3.0 Technical data ... 9
3.1 Operating conditions ... 9
3.2 Operating voltages and limits ... 9
3.3 Product label ... 10

4.0 Structure and function ... 11
4.1 Overview ... 11
4.2 Brief description ... 13
4.3 Special features ... 13
4.4 Construction group description ... 14
4.5 Connection ... 14
4.6 Options ... 14
4.6.1 Limit switch ... 14
4.6.2 Potentiometer ... 14
4.6.3 Absolute analog position output ... 15
4.6.4 Encoder ... 15
4.6.5 Manual Override ... 15

5.0 Transport, packaging and storage ... 16
5.1 Safety information for the transport ... 16
5.1.1 Transport inspection ... 16
5.1.2 Return to the manufacturer ... 16
5.1.3 Packaging ... 16
5.2 Storage ... 16

6.0 Installation and first operation ... 17
6.1 Installation location ... 17
6.2 Installation ... 17
6.3 Inspections prior to first operation ... 19
6.4 Connect to power supply ... 19
6.4.1 Wiring scheme: ... 19
6.4.2 Define moving direction VS power “+”,”-” ... 19

7.0 Operation ... 20
7.1 Safety ... 20
7.2 Action before operation ... 20
7.3 Action during operation ... 20
7.3.1 Normal operation ... 20
7.4 Disengagement in case of emergency ... 21
7.5 Action after use ... 21

8.0 Maintenance ... 22
8.1 Spare parts ... 22
8.2 Maintenance plan ... 22
8.3 Maintenance work ... 23
8.3.1 Cleaning ... 23
8.3.2 Inspections and readings ... 23
8.3.3 Check of visual condition ... 23
8.4 Measures after completed maintenance ... 23

9.0 Malfunctions ... 24
9.1 Malfunction table ... 25
9.2 Start of operation after fixing malfunction ... 25

10.0 Dismantling ... 26
10.1 Dismantling ... 26
10.1.1 Dismantling of CAHB-20 series ... 26
10.2 Disposal ... 26

11.0 Appendix ... 27

⚠ WARNING

Read this manual before installing, operating or maintaining this actuator. Failure to follow safety precautions and instructions could cause actuator failure and result in serious injury, death or property damage.

1.0 General information

1.1 Information on this manual

This manual provides important information on how to work with the actuator safely and efficiently.

The manual is part of the actuator, must always be kept in the actuator's direct proximity and should be available for the personnel at any time. All personnel working with the actuator must read and understand this manual before starting any work. Strict compliance with all specified safety notes and instructions is a basic requirement for safety at work.

Moreover, the accident prevention guidelines and general safety precautions applicable at the place of use of the actuator must also be complied with.

For better representation of circumstances, the illustrations used are not necessarily to scale and may vary from the actual design of the actuator.

1.2 Explanation of symbols and signal words

Safety precautions

Safety precautions are identified by symbols and signal words. These signal words indicate the severity of the hazard.

Adhere to these safety precautions and act cautiously in order to avoid accidents, personal injuries and damage to property.

⚠ DANGER

Indicates a dangerous situation, which will lead to death or serious personal injury, if the precautionary measures are ignored.

⚠ WARNING

Indicates a dangerous situation, which can lead to minor or moderate injury or property damage, if the precautionary measures are ignored.

⚠ CAUTION

Indicates a dangerous situation, which can lead to minor or moderate injury the precautionary measures are ignored.

NOTE

Emphasizes useful hints and recommendations as well as information for efficient and trouble-free operation.

1.3 Limitation of liability

All information and notes in this manual were compiled under due consideration of valid standards and regulations, the present status of technology and our years of knowledge and experience.

The manufacturer will not be liable for damage resulting from:

- disregarding this manual
- unintended use
- employment of untrained personnel
- unauthorized conversions
- technical modifications
- manipulation or removal of the screws on the actuator
- use of unapproved spare parts

In case the actuator is customised, the actual product delivered may be different from what is described in the manual. In this case, ask Ewellix for any additional instructions or safety precautions relevant to these actuators.

We reserve the right to make technical modifications to the actuator to improve usability.

1.4 Warranty terms

The applicable and effective warranty terms are those contained in the manufacturer's terms and conditions of sale.

1.5 Customer service

Ewellix Customer Service is always available to provide technical information and answer questions.

The contact information for Ewellix Customer Service can be found on www.ewellix.com.

2.0 Safety

2.1 Limitation of liability

This chapter provides an overview of important safety precautions and information necessary for safe and trouble-free installation, operation and maintenance.

Disregarding this Manual and safety precautions specified therein may result in considerable danger and possible serious injury or death.

2.1.1 Intended use

The actuator has been designed and built exclusively for its intended purpose as described in these instructions.

⚠ WARNING

Risk from misuse!
Any utilization of this actuator beyond its intended purpose may lead to potentially hazardous situations.
Therefore:

- Strictly adhere to all safety precautions and instructions in this manual.
- Do not allow this actuator to be subjected to weather conditions, strong UV rays, corrosive or explosive air media as well as other aggressive media.
- Do not modify, retool or change the structural design or individual components of the actuator.
- Never use the actuator outside of the technical application and operational limits.

Any injury, damage or loss caused by violation of these instructions will be the responsibility of the customer.

2.2 Responsibility of the owner and processor

The actuator is designed for personal use and is also used in commercial applications by owner or processors.

The processor is the contracting partner of the reseller or the manufacturer. The processor installs the actuator in a complete system (application).

The owner of the system is therefore subject to requirements of the Occupational Health and Safety Act.

In addition to the safety instructions in this Manual, the owner or processor must do the following concerning these safety and acci-dent prevention guidelines and environmental precautions regulations applicable to the site of the system's installation:

- Inform themselves of applicable industrial safety precautions and determine additional hazards that arise due to the specific working conditions prevailing at the site where the actuator is installed using risk assessment. The risk assessment must be implemented in the form of work instructions for the actuator operation.
- Confirm that the work instructions created for the system including the actuator satisfy current legal requirements and must alter the instructions if they don't.
- Clearly regulate and specify the responsibilities for installation, operation, maintenance, and cleaning.
- Ensure that all employees who deal with the actuator have read and understood this Manual.
- Provide personnel with the required protective equipment.

In addition, owner must train personnel at regular intervals and inform personnel of the hazards.

In addition, owner or processors must ensure that the actuator is in an adequate working condition. They must do the following:

- Ensure that the maintenance intervals described in these instructions are complied with.
- Have all safety devices inspected regularly for function and completeness.

⚠ WARNING

Risk from misuse!
AnImproper installation, operation and maintenance can result in serious injury, death or property damage.

Use only qualified, instructed, or trained personnel (as described below) who have read, understand and follow these instructions.

2.2.1 Qualifications

The following qualifications are specified for different areas of activity listed in the Manual.

- **An instructed person (Operator)**
  has been instructed by the customer in an orientation session on the assigned tasks and possible dangers in case of improper behaviour.
- **Qualified personnel**
  based on their professional training, know-how and experience as well as knowledge of the applicable standards and regulations is able to perform assigned work activities and to detect and avoid possible dangers on their own.
- **A professional electrician**
  based on his/her professional training, know-how and experience as well as knowledge of the applicable standards and regulations is able to perform work on electrical systems and to detect and avoid possible dangers on his/her own. The professional electrician has been trained for the special location where he/she works and knows the relevant standards and regulations.

Only persons who are expected to perform their tasks reliably are permitted as personnel. Persons whose reaction capability is impaired, e.g. through drugs, alcohol or medication, are not permitted.

2.2.2 Specific dangers

The following section lists the residual risks that have been determined by the risk assessment.

- Heed the safety instructions listed here, and the warnings in subsequent chapters of this Manual, to reduce health hazards and to avoid dangerous situations.

⚠ DANGER

Danger to life caused by electric current!
Touching conductive parts causes a direct danger to life. Damage to insulation or individual components can cause danger to life.
Therefore:

- In the event of damage to insulation, switch off the power supply immediately and have the parts repaired.
- Work on the electrical system must be carried out only by professional electricians.
- De-energize the machine for all work on the electrical system.
- Before maintenance, cleaning or repair work, switch off the power supply and perform lockout procedures so it cannot be turned on again.
- Do not bridge fuses or make them ineffective. When changing fuses, make sure you use the correct amperage.
- Keep moisture away from conductive parts. If you don't, this can cause short circuit.

⚠ WARNING

Danger of injury caused by moving components!
Rotating and/or linearly moving components can cause severe injury.
Therefore:

- Do not work on or place any of your body, hands, or arms near moving components.

2.3 Safety equipment

⚠ WARNING

Danger due to malfunctioning safety equipment!
For safe operation, be sure all safety equipment is in good working order.
Therefore:

- Always check functionality of safety equipment according to the maintenance plan.
- Never disengage safety equipment.
- Safety equipment may never be by-passed or modified.

Integration in an emergency-stop system required (for certain applications)

The actuator is only intended for installation into an an application or system. It does not have its own operating control elements and does not have an independent emergency-stop-function.

Install the actuator so that it is part of an emergency shut-off system and can be stopped if necessary.

The emergency shut-off system has to be connected in such a way that a disruption of the power supply or the reactivation of the power supply after a power disruption cannot cause a hazardous situation for persons and objects.

The emergency shut-off systems must always be freely accessible.

NOTE

The processor decides which applications require the installation of an emergency shut-off system.

The following safety features may have been installed:

A thermal switch is integrated into the motor inside to prevent damage from overheating. If overheating occurs when the actuator is operating (over specification), the switch would be activated, the power would be cut-off; after the temperature falls below the threshold, the switch will restore.

⚠ CAUTION

To prevent damage from overheating, do not try to operate actuator until its temperature has fallen below the threshold for the switch to operate.

A driving screw nut converts the rotation of the gear unit into linear motion. If an **overload** occurs when the actuator is operating, a ball detent clutch will operate, thus stopping linear motion.

⚠ CAUTION

Continued operation of the clutch can result in overheating and damage to the linear actuator. If clutch activates, switch off power immediately.

2.4 Changes and modifications on the actuator

To avoid hazardous situations and to ensure optimal performance, do not make any changes or modifications to the actuator unless they have been specifically authorized by Ewellix.

3.0 Technical data

NOTE

The technical data (dimensions, weight, output, connection values etc.) can be found in the enclosed drawings and data sheets (↳ **11 Appendix, page 27**).

3.1 Operating conditions

Environment Information	Value	Unit
Temperature range	–40 to +85	°C
Relative atmospheric humidity, maximum (no build up of condensation)	up to 96	%

NOTE

- Full performance: 0 ~ 40 °C
- Degraded performance: below 0 °C, above 40 °C. (The load capacity and speed would degraded, the current would rise, can contact Ewellix for more information).

24 V DC & 48 V DC version – Duration (intermittent) Information	Value	Unit
Maximum operating time without a break	1	Cycles
Break until next operation	4	Times of operating time
Max duty cycle at rated load: 20% (85 s on / 340 s off)		

12 V DC version – Duration (intermittent) Information	Value	Unit
Maximum operating time without a break	1	Cycles
Break until next operation	9	Times of operating time
Max duty cycle at rated load: 10% (85 s on / 765 s off)		

3.2 Operating voltages and limits

The operating voltages and the limits for standard version, including when PWM is used for speed ramp up refer to:

12 V DC version: supply voltage

- For actuator: 12VDC ± 20%
- For Encoder: 4-20VDC
- For Potentiometer: Voltage limited by power 2 W
- For absolute analog position sensor: 10~55 V DC (current consumption 15 mA max.)

24 V DC version: supply voltage

- For actuator: 24 V DC ±10%
- Encoder option: 4–20 V DC
- Potentiometer option: Voltage limited by power 2 W
- For absolute analog position sensor: 10~55 V DC (current consumption 15 mA max.)

48 V DC version: supply voltage

- For actuator: 40 ~ 55 V DC
- Encoder option: 4–20 V DC
- Potentiometer option: Voltage limited by power 2 W
- For absolute analog position sensor: 10~55 V DC (current consumption 15 mA max.)

3.3 Product label

Fig. 1

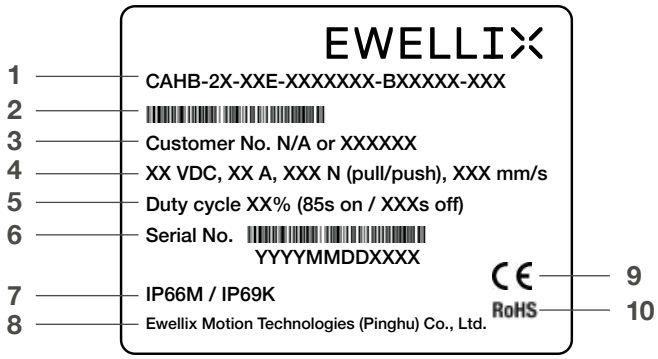

The product label provides the following information

1. Identification of actuator (type key)
2. Part number
3. Customer part number
4. Performance (power voltage, rated current, rated load, speed with rated load)
5. Duty cycle
6. Serial number
7. IP level
8. Manufacturer or the country of origin
9. CE mark
10. RoHS mark

4.0 Structure and function

4.1 Overview

CAHB- 20 E

Include 3 types outline.

Fig. 2

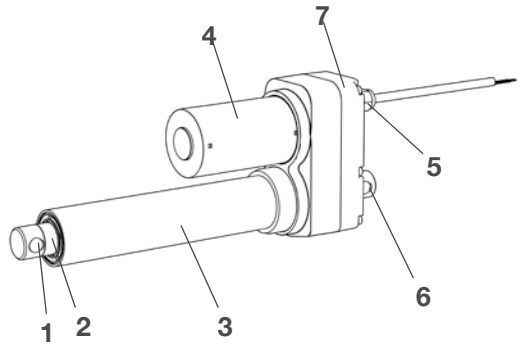

CAHB-20 E without feedback

1. Front hinge head
2. Push tube
3. Guiding tube (Steel tube)
4. Motor
5. Cable
6. Rear hinge head
7. Gearbox

Fig. 3

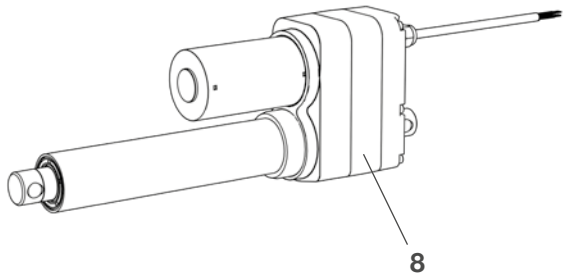

CAHB-20 E with feedback

8. Middle housing

Fig. 4

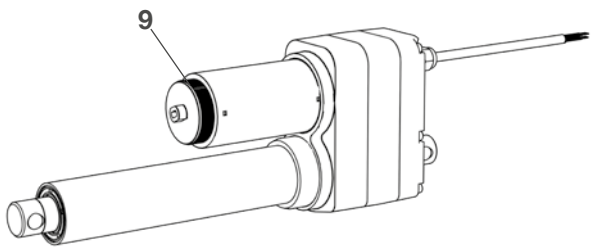

CAHB-20 E with manual override (Manual override option can be configured on all series)

9. Manual override part

CAHB-21 E and 22 E

Include 3 types outline.

Fig. 5

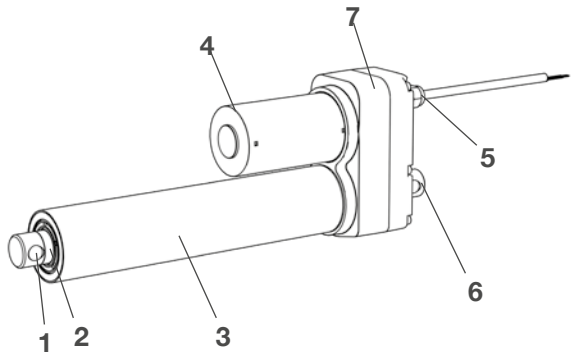

CAHB-21 E and 22 E without feedback

1. Front hinge head
2. Push tube
3. Guiding tube (Al alloy tube)
4. Motor
5. Cable
6. Rear hinge head
7. Gearbox

Fig. 6

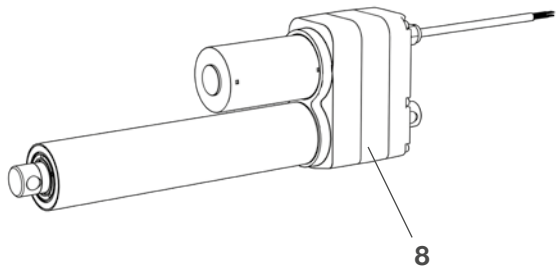

CAHB-21 E and 22 E with feedback

8. Middle housing

Fig. 7

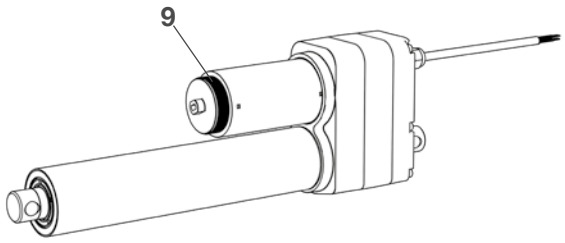

CAHB-21 E and 22 E with manual override (Manual override option can be configured on all series)

9. Manual override part

4.2 Brief description

Overview

Fig. 8

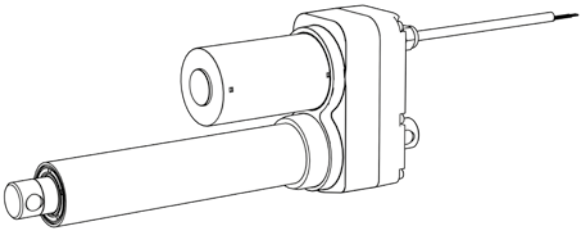

This actuator is to be used exclusively for installation into a dynamic centric-compression or tensile-loaded lift.

The linear actuator consists of a motor part (**4**), a gear unit (**7**) and a linear unit (**3**), connected with each other by a bayonet joint.

The actuator consists of a direct current motor with helical gear which sets in motion a gear transmission system. Via the driving screw and nut,the rotation of gear is transformed into a linear motion of the actuator.

The front hinge head (**1**) and the rear hinge head (**6**) transmit the actuator power to both sides of the application.

4.3 Special features

Mechanical overload protection

The actuator contains a mechanical overload protection unit (clutch).This overload protection unit will activate if the linear unit of the actuator overloads. This activation will avoid to push or pull over the maximum force defined on the data-sheet and will protect the motor and gear unit from being damaged.

⚠ CAUTION

Continued operation of the clutch can result in overheating and damage to the linear actuator. If clutch activates, switch off power immediately.

Thermal protection

The thermal switch built-in the motor will switch off the power of the motor in case of over heat of the motor. It will automatically reset when the temperature decreases.

Overload or more frequent operating the actuator over the max duty cycles defined on the data sheet would lead to motor overheating.

⚠ CAUTION

To prevent damage from overheating when the actuator stop with a high motor temperature, do not restart the actuator but wait until the temperature decreases.

Gore automotive vent

The vent allows the equalization of the pressure inside the actuator when it is operated, that will insure an optimum usage of the sealing system

Fig. 9

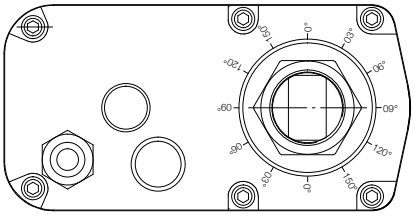

4.4 Construction group description

Motor

The motor is a brushed DC motor, 12 or 24 V DC. The motor's shaft is connected to a helical gear. The lift speed depends on the load. The motor unit is surrounded by metal housing and equipped by a EMC filter. The metal housing cannot be opened.

Gear unit

The helical gear is directly powered by the motor shaft. Gear unit is connected to the over load clutch that moves the drive screw system.

Linear unit

The linear unit is surrounded and protected by the guiding tube. The linear unit of the CAHB-21E or CAHB-22E is equipped by brake. The push tube of the actuator is connected to the nut of the drive screw unit and aligned by the guiding tube.

4.5 Connection

Fig. 10

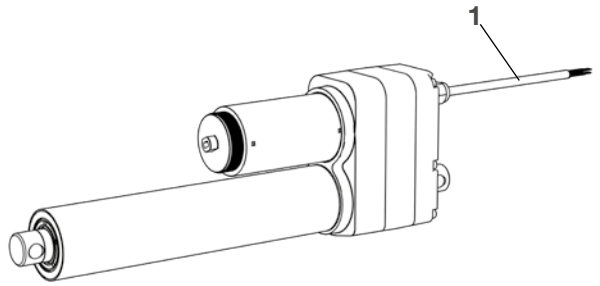

CAHB-2... connections

1. Wires to connect actuator to power supply or to an external control.

4.6 Options

If not specified otherwise, the options listed below are available for the entire series of CAHB-2… linear actuators.

4.6.1 Limit switch

The limit switch makes it possible to control the stroke of the linear unit by internal setting. Contact the Ewellix to adjust the setting of limit switch.

Remark: Limit switch is not available for CAHB-20

4.6.2 Potentiometer

The potentiometer provides a signal indicating the position of the linear actuator. The electrical specification as on the datasheet.

- Linear actuator with potentiometer unit: colours of wire are white, green and brown (↳ **Fig. 11**).

Fig. 11

Potentiometer

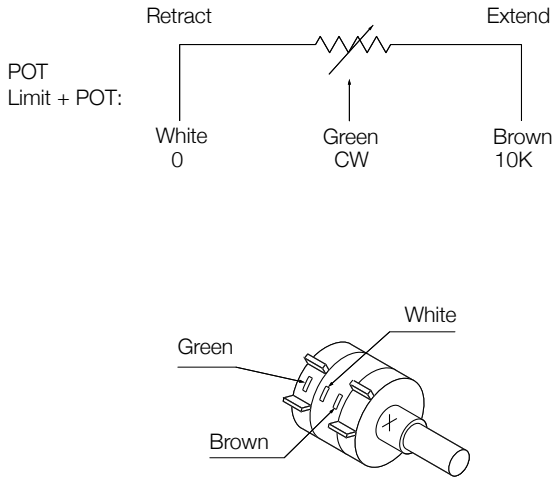

4.6.3 Absolute analog position output

The absolute analog position sensor is a multitude non-contact magnetic sensor. It provides a signal indicating the position of the linear actuator. the output signal is 0 ~ 5V DC voltage (current output 5 mA max). The electrical specification and resolution refer to date sheet, the wires connecting refer to **6.4.1 Wiring scheme**.

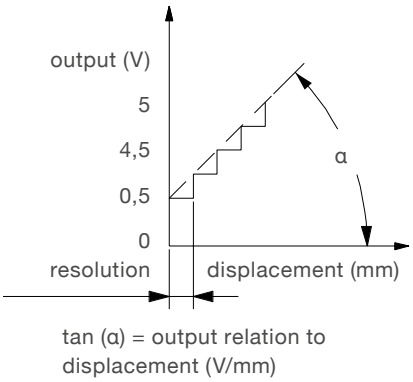

NOTE

When actuator with POT or the analog output, don't rotate the push tube 45 degree and don't connect to power before the actuator is installed into device (see picture below) Otherwise would demage the potentiometer or the analog sensor components.

WARNING

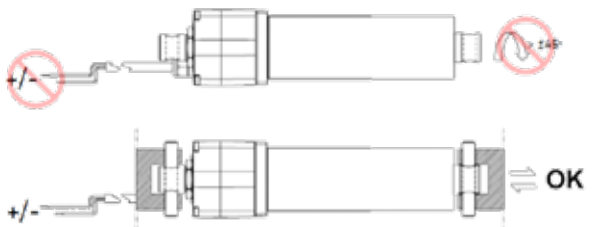

4.6.4 Encoder

Dual hall sensor for incremental position feedback. It outputs signals when the actuator is moving outwards and inwards respectively. The output signals, channel 1 and 2, are ±90°, see the figure below. The electrical specification as on the data sheet.

The supply voltage to the encoder must be in the range 4 to 20 V DC)

Encoder

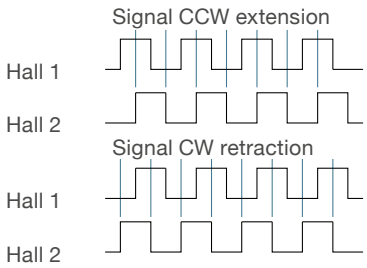

4.6.5 Manual Override

Manual override option provides a solution to move the push tube manually and without tool when power failure. The unscrewed cover can be used as a hand crank. Also a power tool can be used to drive the cover by the hexagon head. Please stop operating the override device when the clutch is activated.

The structure and operating instruction see the figure below.

Release the motor cover (1). Use the slot (2) to rotate the motor shaft (3) in the proper direction

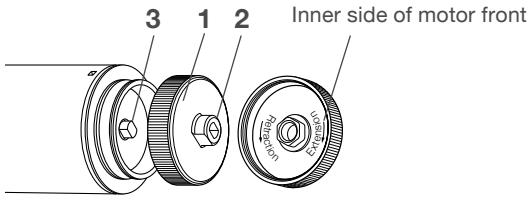

NOTE

The directions showed on the inner side of the motor front represent the extending or retracting of actuator.

DANGER

Danger of injury caused by moving components!
Rotating components can cause severe injury.
Therefore:

- Do not operate the manual override deice when actuator cable is connecting with power supplier.

5.0 Transport, packaging and storage

5.1 Safety information for the transport

⚠ CAUTION

Significant actuator damage can occur if not properly transported, unpacked and stored.
Therefore:

- Proceed carefully during the unloading of the packaged items, during the delivery as well as during the transport to its final destination and comply with the symbols and information shown on the packaging.
- Only remove the actuator from its packaging right before installation.
- Note storage requirements for return transport to the manufacturer (↳ **5.2 Storage, page 16**).

5.1.1 Transport inspection

The CAHB-2… linear actuator is delivered as one packaged unit in a box or on pallets.

Check the delivery for completeness and damage due to transport immediately upon receipt. Send back actuator to manufacturer if it has cracks in the casing caused during transportation.

Check completeness of delivery:

- A complete actuator unit. If damage to the exterior of the actuator has occurred during transport, do the following:
  - Do not accept delivery or do so only with reservations.
  - Record scope of damage on the transport documents or on the bill of delivery of the shipping company.
  - Initiate complaint

NOTE

Report any damage as soon as it has been identified. Damage claims can only be asserted within the transporter's applicable complaint period.

5.1.2 Return to the manufacturer

Proceed as follows for the return transport:

1. Dismantle the actuator if necessary (↳ **10.0 Dismantling, page 26**).
2. Pack the actuator in its original packaging. Follow storage conditions (↳ **5.2 Storage, page 16**).
3. Send to manufacturer.

5.1.3 Packaging

For packaging

The individual packaged pieces have been packaged appropriately according to the expected transport conditions.

The packaging is supposed to protect the individual components from damage caused by the transport, corrosion and other damage until they are ready for installation. Therefore, do not destroy the packaging and only remove the actuator shortly prior to the installation. Keep packaging for possible return shipment to the manufacturer (↳ **5.1.3 Packaging, page 16**).

If the packaging is to be disposed off, please adhere to the following:

NOTE

Packaging material consists of valuable raw materials, which, in many cases, can be recycled.
Therefore:

- Dispose of packaging material in an environmentally correct way.
- Comply with locally applicable disposal regulations.

5.2 Storage

Pack the actuator in its original packaging for storage.

- Do not store outside.
- Dry and dust-free storage.
- Keep away from any aggressive media.
- Protect from UV radiation.
- Avoid mechanical vibrations.
- Storage temperature: –55 to 90 °C.
- Relative atmospheric humidity: max. 95% (no build up of condensation).
- For storage for longer than three months, check the general condition of all parts of the packaging on a regular basis. If necessary, refresh or renew the conservation.

NOTE

It is possible that there are notices on the packaging concerning additional storage requirements. If so, follow all requirements.

6.0 Installation and first operation

Authorized personnel

- The installation and first start of operation may only be conducted by qualified personnel.
- Work on the electric system may only be performed by trained electricians.

⚠ WARNING

Electric shock and moving parts hazards
Serious injury or death can be caused by touching live electrical components and by unexpected movement of the actuator.
Be sure the system's power supply is off and actuator is locked out before installing.

⚠ WARNING

Danger if restarted without authorization!
When correcting faults, there is danger of the energy supply being switched on without authorization. This poses a lifethreatening hazard for persons in the danger zone.
Therefore:

- Prior to starting work, switch off the system and safeguard it from being switched on again.

⚠ WARNING

Risk of injury and material damage due to incorrect installation of the optional devices!
Therefore:

- Optional devices, in particular components that are part of a retrofitting, may only be installed in accordance with the respective instructions (circuit diagram).
- The electromagnetic compatibility must be tested for the routing and appropriate measures must be carried out if necessary.

6.1 Installation location

Adhere to the technical data in accordance with operating conditions (↳ **11 Appendix, page 27**).

Install in a location where the actuator is not exposed to strong UV radiation or corrosive or explosive air media.

6.2 Installation

The CAHB-2… linear actuator is attached to two elements via the hinge heads.

1. Connect the hinge heads (**1** and **2**, ↳ **Fig. 12**) to the appropriate elements of the application with the fastening bolts.

Fig. 12

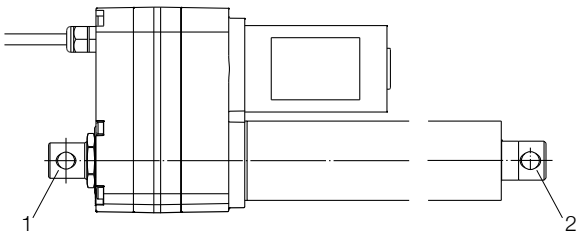

NOTE

Information concerning the diameter of hinge heads can be found in the datasheet. The dimensions of application elements and pins / fastening bolts should be appropriate. The fit dimensions between holes and pins should follow the general tolerance principle so that keep a good installation status

⚠ WARNING

Risk of injury and material damage due to insufficient fastening!
Only use fastener and secure them adequately. Do not use full-thread screw to install, the thread would damage the attachment hole and increase friction. Never loosen or otherwise manipulate screws on actuator or options.

2. Ensure that the applied force on the fastening bolts is always centrically directed on the actuator (↳ **Fig. 13**).

Fig. 13 Correct installation

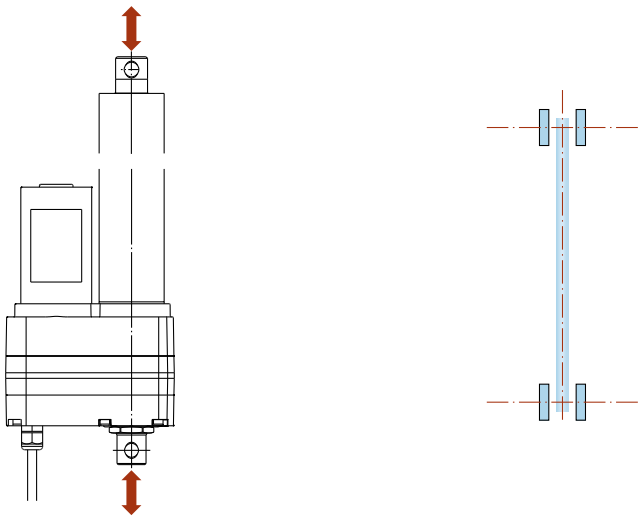

Issues schemes:

Parallell issue

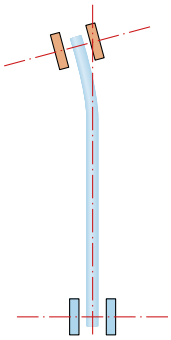

Misaligned issue

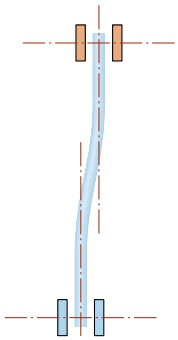

⚠ WARNING

Risk of injury and material damage due to incorrect installation!
During installation, do not subject the actuator to side-impact or to turning forces.

3. During installation, be sure that the linear actuator is not impacted in its movement over the entire stroke area.
4. During installation, be sure that the motor cable is not squeezed, clamped or pulled.
5. Connect linear actuator to power supply (↳ **6.4 Connect to Power Supply, page 19**).
6. Ensure that none of the supply or control cables can be pinched by the kinematics of the application or by the linear actuator during the extension or retraction

6.3 Inspections prior to first operation

Prior to the first operation, a professional electrician must perform and document the following tests and readings:

- Check visual condition
- Function check of operating features and safety features
- Reading of protective conductor resistance
- Reading of leakage currents
- Reading of insulation resistance

NOTE

Additional information concerning inspections and readings (↳ **8.0 Maintenance, page 22**).

6.4 Connect to power supply

⚠ DANGER

Electrical shock hazard

Incorrect installation can result in serious injuries, death or damage. Only professional electricians should work on electrical systems.

6.4.1 Wiring scheme:

Actuator without L.S.

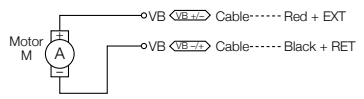

Actuator with L.S.

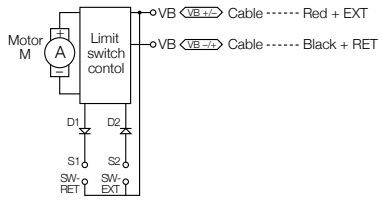

Actuator with POT and without L.S.

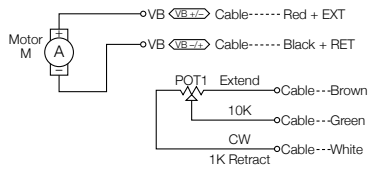

Actuator with POT and L.S.

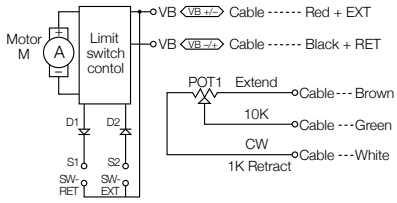

Actuator with encoder and without L.S.

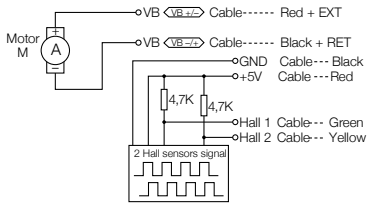

4,7 KΩ parts need be configured by customer (control unit)

Actuator with encoder and L.S.

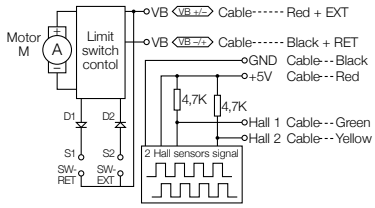

Actuator with L.S. & Absolute analogue sensor

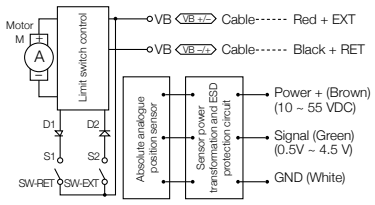

Actuator without L.S. & with Absolute analogue sensor

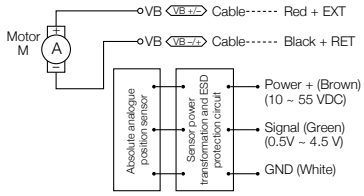

6.4.2 Define moving direction VS power "+","-"

Actuator performs the extending and retracting as defined in **table 1**.

Table 1

	Cable (Red)	Cable (Black)	Actuator (Standard)
I	–	+	Extending
II	+	–	Retracting

7.0 Operation

7.1 Safety

⚠ DANGER

Risk of crushing!
Actuator may cause serious injuries while moving.
Therefore:

- Ensure that there are no persons in the stroke area of the actuator while in operation.
- Take note of maximum permissible operating data for the actuator (↳ **11.0 Appendix, page 27**).
- Never tamper with the elements that are connected to the actuator while the actuator is in operation.

⚠ CAUTION

Risk of injury through contact with the hinge head!
Therefore:

- Do not let objects or body parts come in contact with the hinge head of the actuator.

⚠ CAUTION

Material damage due to static and dynamic overload of the actuator!
Therefore:

- Adhere to maximum permissible operating data for the actuator (↳ **11.0 Appendix, page 27**).
- Never exceed nominal load.
- Never tamper with the elements that are connected to the actuator while the actuator is in operation.

⚠ CAUTION

Actuator may be damaged if liquids penetrate the actuator during extension and retraction. Keep liquids away.

⚠ CAUTION

Material damage through overheating!
Therefore:

- Only use control integrated thermal switch.
- Never exceed nominal load (↳ **11 Appendix, page 27**).
- Always adhere to idle times and operating times (↳ **11 Appendix, page 27**).

7.2 Action before operation

Ensure that there are no persons or objects in the stroke area of the actuator.

7.3 Action during operation

7.3.1 Normal operation

During normal operation, the linear actuator lifts and lowers the elements that are connected with the CAHB-2…linear actuator via the hinge head.

For all CAHB-20E and the CAHB-21E and CAHB-22E without Limit switches option, the clutch will activate if the linear actuator is completely extended or retracted. In case of optional limit switches or external limit switches installed on the application, the actuator will stop before to reach the mechanical end stop and the clutch activation.

Use only the actuator within the specified limits.

Don't place any of your body, hands, or arms near moving components.

⚠ CAUTION

Material damage through overheating!
Therefore:

- Only use control integrated thermal switch.
- Never exceed nominal load.
- Always adhere to idle times and operating times (↳ **11 Appendix, page 27**).

⚠ CAUTION

Material damage due to incorrect set up of the limit switch!
Therefore:

- Select limit switch or other electrical component that is adequate for the rating voltage and current of linear actuator (↳ **3.0 Technical data, page 9**).
- Consider the inertia of the movement of the linear actuator while setting up the position of the limit switch.
- Prior to starting work, run a function test to confirm that the external limit switch is operating properly.

⚠ DANGER

Electrical shock hazard
Incorrect installation can result in serious injuries, death or damage. Only professional electricians should work on electrical systems.

7.4 Disengagement in case of emergency

In hazardous situations, all movements of the actuator must be stopped as quickly as possible and the power supply must be turned off.

Proceed as follows in hazardous situations:

1. Immediately engage emergency shut-off, if present, or cut off power for actuator.
2. Evacuate people from the hazard zone, initiate first aid measures.
3. Notify responsible person on-site.
4. If rescue vehicles have been requested, keep access paths open for rescue vehicles.
5. Based on severity of emergency, notify the authorities if necessary.
6. Order specialized staff to repair malfunction.

⚠ WARNING

Do not restart until all persons are outside the hazard zone. Check the actuator and application that uses the actuator prior to restarting the operation and ensure that all safety equipment is installed and fully functional

7.5 Action after use

Separate the actuator from the power supply.

8.0 Maintenance

Personnel

- The maintenance work described herein can be performed by the operator unless otherwise indicated.
- Some maintenance tasks should only be executed by especially trained, qualified personnel, or exclusively by the manufacturer; specific reference will be made in each case in the description of the respective maintenance task.
- Only professional electricians should perform work on the electrical equipment.

⚠ DANGER

Electrical shock hazard
Incorrect installation can result in serious injuries, death or damage. Only professional electricians should work on electrical systems.

⚠ DANGER

Danger if restarted without authorization!
When correcting faults, there is danger of the energy supply being switched on without authorization. This poses a lifethreatening hazard for persons in the danger zone.
Therefore:

- Prior to starting work, switch off the system and safeguard it from being switched on again.

8.1 Spare parts

The CAHB-2… linear actuator is not designed for repair work by the customer. All warranty and service claims become void without notice if any screws on the linear actuator have been manipulated.

⚠ WARNING

Safety hazard caused by wrong spare parts!
Wrong or faulty spare parts can adversely affect safety and cause damage, malfunctions or total failure.
Therefore:

- Use only genuine spare parts from the manufacturer.
- Spare parts in/on the actuator may only be replaced by Ewellix.

The actuator must be dismantled and sent to the manufacturer. The address is listed on the cover back.

8.2 Maintenance plan

Maintenance tasks that are required for optimal and trouble-free operation are described in the sections below.

If increased wear is detected during regular inspections, shorten the required maintenance intervals according to the actual indications of wear.

Linear actuator CAHB-20 series maintenance plan

Interval	Maintenance work	To be carried out by
Daily	Check actuator for visible damage (↳ **8.3.3 Check of visual condition, page 23**)	Operator
	Clean off dust and dirt if necessary (↳ **8.3.1 Cleaning, page 23**)	Operator
Monthly	Function check of operating features and safety features (↳ **8.3.2 Inspections and readings, page 23**)	Qualified personnel
	Check tight fit of the actuator to the hinge head. Tighten if necessary	Qualified personnel
Annually	Check connection for tight fit	Professional electrician
As suggested by processor	Conduct visual inspection of the condition of the permanent safeguard and the routing of the supply and control cable within the application. Cable routing elements may not be loose or broken.	

NOTE

If the linear actuator is used outside of the environmental conditions specified earlier in this manual, check such components once a month for any changes such as oxidation or sedimentation.

8.3 Maintenance work

8.3.1 Cleaning

To be performed by operator

⚠ CAUTION

Damage due to incorrect cleaning!
Therefore:

- Do not use any aggressive cleaning agents. Water used forcleaning including the chemical additives must be pH-neutral.
- Liquids must not touch the actuator during the retraction or extension.
- Only use additional cleaning materials listed by the manufacturer.
- No steam jets or pressure washers may be used for cleaning.
- Other cleaning agents or cleaning devices may only be utilized with the manufacturer's approval.

Clean line actuator:

1. Separate the actuator from the energy supply.
2. Clean dirty parts with a damp cloth.

8.3.2 Inspections and readings

To be performed by professional electrician

- The inspections and readings must be performed as required by the applicable standards and regulations. The list of the applicable standards can be found in the appendix.
- The inspections must be documented (↳ **Service Log**).

Service log

- Complete the following entries in the service log:
- Name of the executing body (company, department).
- Names of the staff on duty.
- Identification of the actuator/system (type, serial number, inventory number) and the respective accessories.
- Completed inspections and readings.
- Scope and results of the inspections.
- Measuring method, measuring device, measuring results for readings.
- Overall assessment.
- Date and signature of the assessing person; personal coding is a viable alternative for IT applications.

8.3.3 Check of visual condition

To be performed by qualified personnel

1. Separate the actuator from the energy supply.
2. Check the following structural components for visible external damage:

Fig. 8

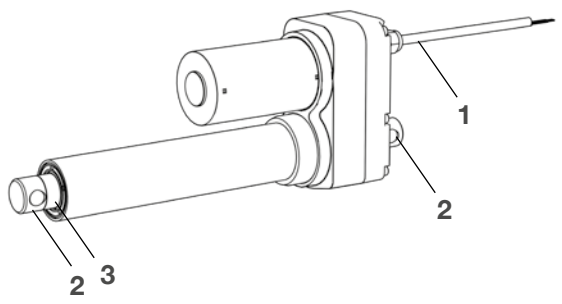

   1. Check connecting cables for cracks, cuts and pinched sections
   2. Check hinge hole for cracks, deformation and broken pieces
   3. Check stainless steel tube for scratches and indentations
3. Notify processor or Ewellix in case of damage
4. If there is no damage and the processors/manufacturer has not communicated any concerns, reconnect the actuator to the power supply.

8.4 Measures after completed maintenance

Upon completion of the maintenance work, the following steps have to be performed prior to restarting the actuator.

1. Check all previously loosened screw connections for a tight fit.
2. Ensure that all tools, material and other equipment used during maintenance have been removed from the work area.
3. Clean work area and remove potential spills such as liquids, processing material or similar.
4. Ensure that all safety measures of the system work properly without a problem.
5. Check to be sure that all actuator and system functions are operating correctly.
6. Document the the maintenance in the service log.

9.0 Malfunctions

The following chapter describes potential causes for malfunctions and the work that is necessary to restore operation.

In the event of frequent malfunctions, shorten the maintenance intervals.

Contact the manufacturer concerning malfunctions which are not solved by the following suggestions.

Personnel

- Unless indicated otherwise, the work described herein to solve malfunctions may be performed by the operator.
- Some work may only be carried out by qualified personnel, which is specifically indicated in the description of the individual malfunction.
- Work on the electric system may only be performed by professional electricians.

⚠ DANGER

Electrical shock and moving parts hazards
Serious injury or death can be caused by touching live electrical components and by unexpected movement of the actuator.

Be sure power supply is off and actuator is locked out before installing.

⚠ DANGER

Danger if restarted without authorization!
When correcting faults, there is danger of the energy supply being switched on without authorization. This poses a lifethreatening hazard for persons in the danger zone.
Therefore:

- Prior to starting work, switch off the system and safeguard it from being switched on again.

⚠ DANGER

Risk of injury and material damage due to incorrect repair of malfunction
Therefore:

- Never loosen the screws on the linear actuator or try to openthe linear actuator.
- In the event of a malfunction that cannot be fixed by following Malfunction table (↳ **page 25**), then dismantle the actuator and send it to the manufacturer for repair (↳ **5.0 Transport, packaging and storage, page 16**)

Behavior during malfunctions

In principle:

1. In the event of a malfunction that may present an immediate danger to persons or assets, turn off the actuator or control unit immediately and safeguard against a restart.
2. Determine cause of malfunction.
3. Depending on the type of a malfunction, have it repaired by qualified personnel.
4. Inform responsible party on-site concerning malfunction.

NOTE

The following malfunction table provides information as to who is authorized to perform the repair.

9.1 Malfunction table

Symptom	Checkpoint	Possible cause	Action (Possible Solution)
Actuator w ill not extend/retract	No voltage or amp draw	No power given	Check power supply
		Lack of plug contact or plug has not been inserted properly	Check plug and insert properly
		Defective cable or power plug (may be damaged)	Send actuator for repair
	Proper voltage, no amp draw	Thermal overload cut-out (when overheated)	Let cool, check duty cycle
		Dead motor	Send actuator for repair
		Lifespan of the actuator is exceeded	If the actuator has performed more than 5 km double strokes, the actuator needs to be replaced.
	Proper voltage, amp draw present, but clutch slips	Actuator overloaded	Check rated load or remove all obstacles in the stroke area
		Clutch worn	Send actuator for repair
		LS activator damaged	Send actuator for repair
	Proper voltage, amp draw present, clutch not slips	Gear wheel or nut thread damaged	Send actuator for repair
Actuator stops in mid-stroke	Clutch slips, amperage present	Actuator overloaded	Check rated load or check voltage (maybe too low)
	Clutch doesn't slip, no amperage	Thermal cut-out	Let cool, check duty cycle
	Clutch doesn't slip, amperage present	Motor stalled	Check voltage too low
Actuator cannot lift full load or Significantly reduced speed	Proper voltage, amp draw present	Cutch is worn	Send actuator for repair
		Motor is damaged	Send actuator for repair
		Insufficient power supply	Increase power supply
		Voltage drop in cable	Thicker cable
		Apply under lower temperature (performance would degrade below 0 °C)	Contact Ewellix for suitable actuator type
Significant increase in noise	Big amperage	Obstacle in the stroke area of the linear actuator	Remove all obstacles in the stroke area
	Big amperage	Incorrect load	Check rated load
	Abnormal noise	Motor, gear or screw nut damaged	Send actuator for repair or replace the actuator
No signal from POT or Hall sensor	No voltage	Lack of signal wires contact or plug has not been inserted properly	Check connect and insert properly
	Abnormal voltage present	Wrong connect led to components failed	Send actuator for repair

9.2 Start of operation after fixing malfunction

After the malfunction has been fixed, perform the steps from the chapter Installation prior to restart.

10.0 Dismantling

Personnel

- The dismantling may only be carried out by specifically qualified personnel.
- Work on the electric system may only be performed by professional electricians.

⚠ DANGER

Electric shock and moving parts hazards
Serious injury or death can be caused by touching live electrical components and by unexpected movement of the actuator.
Be sure power supply is off and actuator is locked out before installing.

⚠ WARNING

Risk of injury due to incorrect dismantling!
Stored residual power, sharp-edged components, pins and corners on the individual components or at the required tools can cause serious injuries.
Therefore:

- Ensure there is ample space for dismantling prior to startingwith the work.
- Use caution when working with open, sharp-edged structural components.
- Ensure order and cleanliness at the dismantling site! Loosely stacked structural components or structural components and tools on the floor may present a source for accidents.
- Dismantle structural components professionally pursuant to applicable local regulations.
- Secure structural components in a way so they would not be able to fall or tip over.
- Contact the manufacturer if you have any questions or concerns.

10.1 Dismantling

10.1.1 Dismantling of CAHB-20 series

1. Separate actuator from energy supply (↳ **7.4 Disengagement in case of emergency, page 21**).
2. Secure elements of the application in such a fashion, that no loads can impact the hinge heads.
3. Loosen and remove fastening bolts from the mounting strap of the hinge heads.
4. Separate linear actuator from application elements.
5. Clean actuator.
6. Carefully package for shipment to the manufacturer. (↳ **5.0 Transport, packaging and storage, page 16**).

10.2 Disposal

To the extent that no take-back or disposal agreement has been put in place, disassembled components should be recycled:

- Dispose of metals and plastic components at an appropriate recycling center.
- Sort remaining components based on the respective material and dispose of according to applicable local occupational health and environmental regulations.

⚠ CAUTION

Damage can be caused to the environment due to incorrect disposal!
Electronic waste, electronic components, lubricants and other additives are subject to special waste treatment regulations and may only be disposed of by approved specialized companies!

The local municipal authorities or specialized waste management companies can provide information concerning environmentally appropriate disposal.

11.0 Appendix

Technical data sheets

Please refer to the following document:

Actuator range catalogue **PUN BUM IL-05002/1-April 2020**

ewellix.com

© Ewellix

All contents of this publication are the property of Ewellix, and may not be reproduced or given to third parties (even extracts) without permission. Although great care has been taken in the production of this catalog, Ewellix does not take any responsibility for damage or other loss resulting from omissions or typographical errors. The photo may differ slightly in appearance from the actual product. Due to continuous improvements being made in our products, the product's appearance and specifications are subject to change without notice.

PUB NUM TC-08004/1-EN-April 2020